SIGMA™

Hydrant Bury
Mechanical Joint
Ductile Iron 350

Item#	Size	Wt (Lbs)
DBM624	6x24	68.13
DBM630	6x30	98.24
DBM636	6x36	110.36
DBM642	6x42	122.47
DBM648	6x48	134.58
DBM654	6x54	146.69

Section B-B

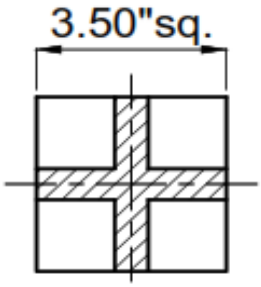

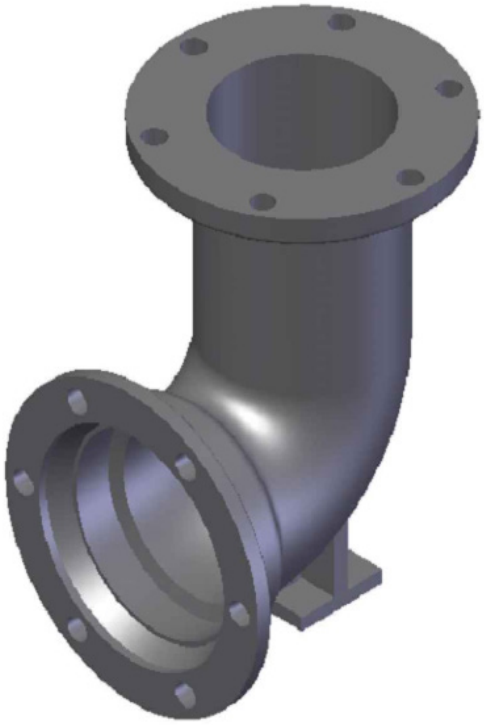

Section A-A

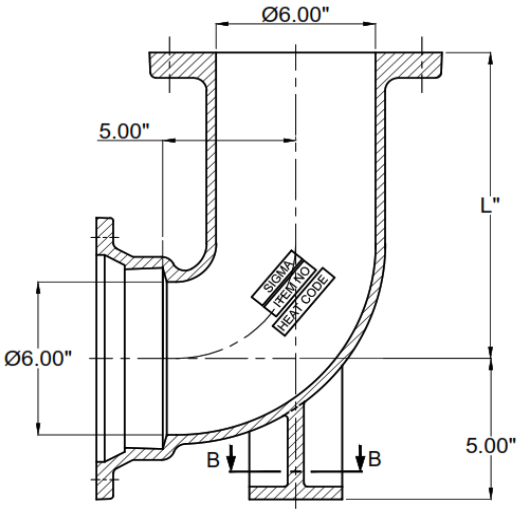

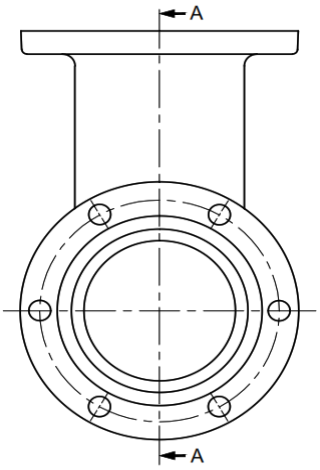

Notes:

1. Material: Ductile Iron, ASTM-A536, Grade 70-5-5 or 60-42-10
2. Drawing design is as per ANSI/AWWA C153/A21.53
3. Pressure Rating: 350psi
4. Flanges are drilled with 6 holes (Los Angles) of 3/4" diameter @ 9 1/2" bolt circle diameter, 8 holes of 7/8" diameter @ 9 1/2" bolt circle diameter, or 6 holes (San Diego) of 7/8" diameter @ 9 1/2" bolt circle diameter.
5. Cement-mortar lined thickness as per ANSI/AWWA C104/A21.4
6. Conforms to AWWA C503-18 standard

RELEASED FOR PATTERN PRODUCTION DRAWING
DATE:- 11.12.2018
SREENIVASA RAO

Rev	Date	Revision Record	Prepared by	Approved by

RADIUS: ±.030 , MACHINED: . XX±.015

TOLERANCES UNLESS OTHERWISE SPECIFIED

CAST:

0"-1"	±0.04"
0-25mm	±1mm
1"-4"	±0.06"
25-100mm	±1.5mm
4"-16"	±0.09"
100-400mm	±2.3mm
18"-30"	±0.11"
457-762mm	±2.8mm
36"-60"	±0.13"
914-1524mm	±3.3mm

All Radii & Fillets to be 0.12" (3mm) unless otherwise specified
All Draft angles to be 2° unless otherwise specified on drawing

Product Group :- Ductile Iron Fittings
Coating/Lining:- Asphaltic Coating/Cement Lined
Type :- FITTING SIZE AND CAST MARKS
Product Description:- C153-MJ Hydrant Buries with Base Fitting & Cast Marks - 612 - 654 Dimensions.
Drawing Number :- DBM612 - 654
Rev :- 0

SIGMA™
CREAM RIDGE, NEW JERSEY

DATE : 11.12.2018	DRAWN BY : KR
DRAWING FOR: SUBMITTAL	CHECKED BY : PB
SCALE: NTS / SHEET NO: 1 OF 1	APPROVED BY : SR1

SIGMA Corporation
4652 E. Guasti Road
Ontario, CA 91761
800-688-6230 P
909-391-2033 F
www.sigmaco.com

February 2023